COVERING BEST PRACTICES FOR THE INDUSTRY

Sulfuric Acid TODAY

www.H_2SO_4Today.com

Spring/Summer 2018

Bestgrand Chemical successfully starts up world's largest wet-gas sulfuric acid plant in China Page 7

IN THIS ISSUE >>>>

Wet-gas tech asserts standing with largest plant in China

By: April Smith, Editor, Sulfuric Acid Today

Gaining ever wider acclaim in the area of capturing and treating sulfurous waste gases, wet-gas sulfuric acid (WSA) technology recently passed a milestone. The largest WSA plant, a 300,000 ton per year sulfuric acid facility, came online this year in Huizhou, China. A process that captures sulfur in large enough quantities to ensure environmental compliance with room to spare, WSA draws equal attention for a key side benefit: the generation of commercial grade sulfuric acid.

Other features contributing to WSA's popularity include the system's overall efficiency when compared to the traditional alternative, a Claus plant. Unlike the Claus process, in which sulfurous waste is converted to elemental sulfur, WSA recovers more heat and the sulfuric acid produced is easier to transport and often more valuable than elemental sulfur. Plus, a WSA plant can be configured simply and with a small footprint, has low consumption of utilities, generates no waste products or wastewater, and offers a wide turndown capability.

WSA was developed and patented by Haldor Topsoe A/S in the mid-1970s, and the first plant started up in 1980. The process began as a spin-off from the company's activities as a catalyst producer for the sulfuric acid industry. Catalyst for the production of sulfuric acid was the first catalyst Topsoe produced, and the company has been supplying it since 1944. Currently, Topsoe supplies its VK-WSA catalyst to the over 130 WSA plants it has licensed worldwide.

The oil refining industry remains the predominant application of the technology, accounting for roughly half of today's WSA plants. In oil refining, off-gas treatment facilities such as a WSA plant are needed to capture the hydrogen sulfide (H_2S) gas that is generated as a consequence of removing sulfur from petroleum products, such as gasoline, diesel, and other fuel oils. The sulfur is removed to reduce sulfur dioxide emissions when those fuels are ultimately used in cars, trucks, jets, etc.

Though oil refining is the largest market for WSA, the tech can be applied to other industries, including coal gasification, natural gas sweetening, coking, viscose, and metallurgical industries. In addition to capturing H_2S gas from refinery operations, WSA plants also handle sour water stripper (SWS) gases and spent sulfuric acid regeneration from alkylation.

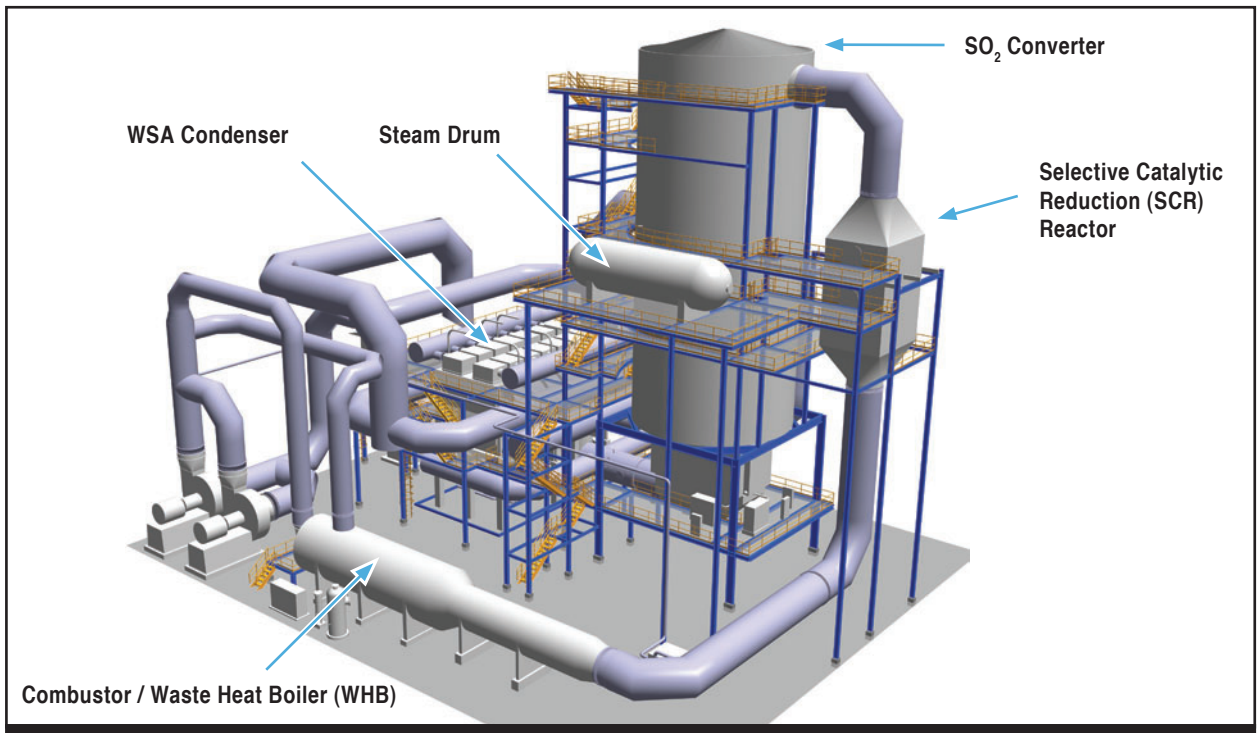

Configuration of 300,000 TPY WSA plant includes Topsoe's proprietary condenser. The system's waste heat boiler ensures high heat recovery to produce valuable steam and the optional selective catalytic reduction reactor captures NOx from tail gas.

WSA goes big in China

Since 2000, Topsoe has sold 68 WSA plants in China, with 54 of them already on stream. The most recent and largest WSA plant to come online was sold to Bestgrand Chemical Group, and treats off-gases from the neighboring petrochemical complex, known as "Nanhai" in Huishou, Guangdong province. The new WSA plant has the capacity to treat 131,000 tons per year of acid gas and produce 300,000 tons per year of sulfuric acid.

The Nanhai complex is operated by CSPC, a joint venture between China National Offshore Oil Corporation (CNOOC) and Shell Petrochemicals Co. Ltd. CNOOC is the largest offshore oil and gas producer in China. The Nanhai refinery has an ethylene production capacity of 950,000 metric tons per year which it converts to 2.7 million metric tons per year of derivative products. CSPC supplies these products to the Chinese domestic market, which uses them as raw materials in household goods, electric appliances, automobiles, medicine, agriculture, and other products.

As CSPC sought ways to capture hydrogen sulfide emissions from its refining process, the company looked to Bestgrand Chemical Group to build a neighboring facility to handle over-the-fence waste gas from the refinery. Bestgrand then contracted with Haldor Topsoe to license the new WSA plant.

Bestgrand Chemical Group is the chemical arm of Bestgrand Holdings Co. Ltd., an enterprise with diverse businesses including commercial real estate development and venture capital investment. When the Chinese government began developing the Nanhai complex, Bestgrand entered the chemical industry collaborating with CSPC on the refinery's construction. Bestgrand also coordinates with CSPC as a distribution partner for styrene and a supplier of benzene, liquid caustic soda, and potassium hydroxide for the refinery.

Why WSA?

As Bestgrand considered the options for off-gas abatement, it was attracted to the efficient and economical manner in which a WSA plant converts waste gas to sulfuric acid. "The WSA technology from Topsoe produces commercial-grade sulfuric acid directly from acid gas," said Gu Hongkuan, Standing Vice Manager at Bestgrand, "so we eliminate the intermediate step of producing elemental sulfur as in the traditional Claus process."

Bestgrand also weighed the cost savings from the energy that the WSA system delivers to CSPC's refining operation. "The WSA plant supplies a huge amount of high-pressure steam to CSPC, saving its operation four million dollars in steam costs every year," Hongkuan said.

As for the environment, nearly complete sulfur capture is another chief driver. "WSA recovers up to 99.99 percent of sulfur in waste gases or liquids, even without tail gas treatment," said Morten Lykke Poulsen, Licensing Director for WSA. Bestgrand predicts the plant will also reduce carbon dioxide emissions by at least 260,000 tons per year and SO_2 emissions to a level 50 percent lower than what is required of the sulfuric acid industry.

And then there's the acid. "WSA produces commercial grade, concentrated sulfuric acid (above 98 percent) from waste gases or liquids," Poulsen said. The sulfuric acid then provides licensees with a cost offset because the acid can be re-used in production or sold as a commercial product.

Construction on the plant began in January of 2016. Topsoe provided the licensing tech as well as tech services, engineering design, hardware, and performance catalysts. The plant came online in February 2018.

The process technology

The WSA system condenses wet process gas into concentrated sulfuric acid. Because the WSA design relies on wet feed gas, there is no pre-treatment drying step and hence generation of waste water and loss of sulfur are avoided.

During the first step of the process, feed gases such as hydrogen sulfide and other sulfurous compounds are combusted to produce an SO_2 gas at the operating temperature of the oxidation catalyst in the SO_2 converter. The excess heat from this operation is recovered as steam.

Next, catalytic conversion of SO_2 to SO_3 takes place:

$SO_2 + ½ O_2 \rightarrow SO_3 + 99$ kJ/Mol

Conversion is achieved in catalyst beds using Topsoe's VK-WSA catalyst, which has been specially developed for this purpose. The number of beds depends on the SO_2

Morten Lykke Poulsen, Licensing Director for WSA

Bestgrand Chemical Group's WSA plant came online in February 2018. The plant is predicted to reduce carbon dioxide emissions by at least 260,000 tons per year and SO_2 emissions to a level 50 percent lower than what is required of the sulfuric acid industry.

Bestgrand Chemical Group has successfully started the world's largest WSA plant.

concentration and the degree of conversion required. In a multi-bed arrangement, inter-bed cooling can be achieved in different ways depending on the heat balance of the plant and the requirement to recover energy from the process. Reaction heat is recovered between the catalyst beds to generate high pressure steam.

At the converter's exit, the gas is cooled allowing the SO_3 to react with water vapor to form gas-phase sulfuric acid:

SO_3 (g) + H_2O (g) -> H_2SO_4 (g) + 101 kJ/Mol

The cooled sulfuric acid gas enters Topsoe's proprietary WSA condenser, which condenses the sulfuric acid gas to form the liquid product. The WSA condenser is a vertical shell and tube falling film condenser/concentrator with tubes made of boronsilicate acid and shock resistant glass. The process gas flows up the tubes and is cooled by ambient air circulating on the outside of the tubes. Sulfuric acid condenses in the tubes and flows downward counter-current to the rising hot process gas. This contact with the hot process gas concentrates the acid to the desired concentration.

Clean gas exits the top of the WSA condenser and the sulfuric acid collects in the brick-lined bottom section where it is pumped out, then cooled and stored. Hot air generated in the WSA condenser can be used as preheated combustion air to ensure optimal energy efficiency.

The process is easily adapted to handle gases containing impurities such as NOx. A selective catalytic reduction (SCR) reactor can be positioned before the SO_2 converter and ammonia is introduced into the gas stream before the SCR reactor in a stoichiometric amount to the NOx in the gas. The NOx is converted to nitrogen and water:

NO + NH_3 + ¼ O_2 -> N_2 + 3/2 H_2O + 410 kJ/Mol

Evolving the system

As clients seek economical options to manage ever stronger environmental standards, Topsoe has been enhancing the technology. A recent introduction is the double-condensation (DC) WSA that removes up to 99.99 percent of sulfur without costly tail gas treatment.

The WSA-DC technology utilizes the high conversion efficiency of the double contact principle. At the same time only a modest change in the design is required to include the intermediate WSA condenser.

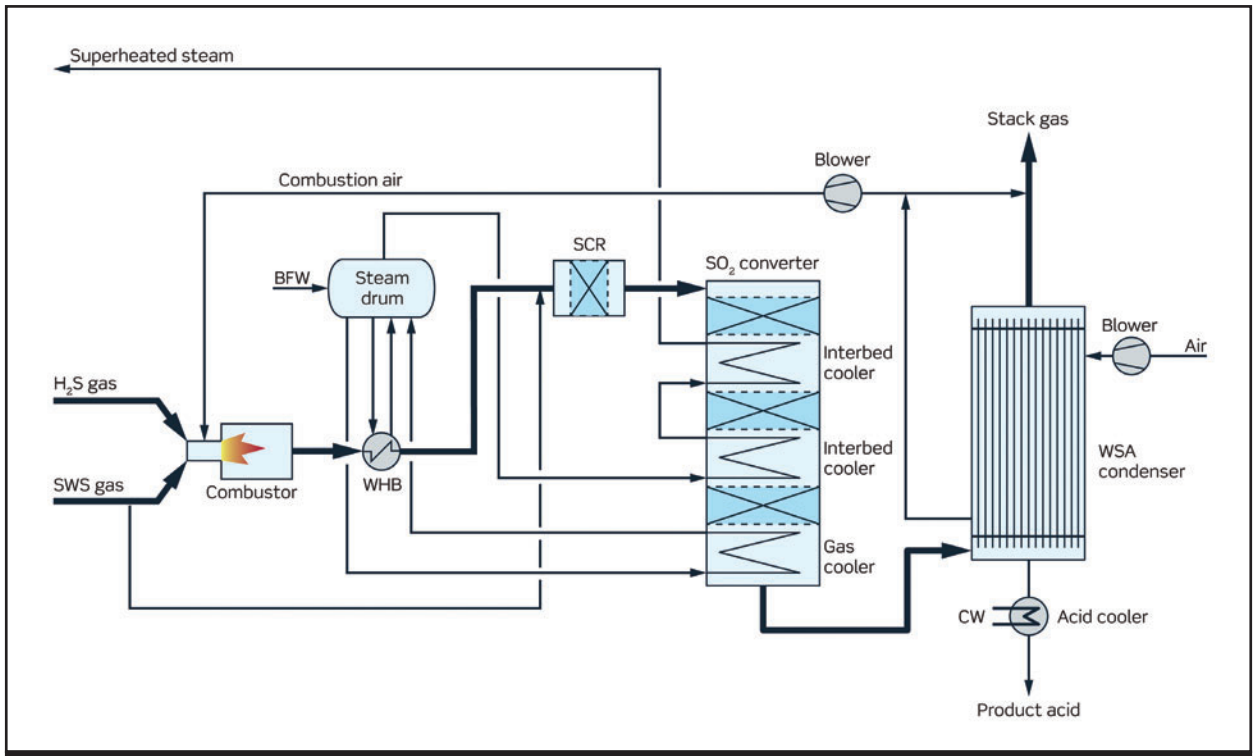

Typical WSA plant cleaning H_2S and sour water stripper gases.

Moving ahead

Although the predominant market for WSA tech has been in oil refining, with roughly half the world's WSA acid generated from refineries of all sizes, licensing continues to be strong across other industries. Another large segment is coal gasification for production of ammonia, methanol, or substitute natural gas (SNG).

Bestgrand also sees a larger role for WSA. "With the mutual benefits we have seen from our new WSA plant," said Hongkuan, "Bestgrand will definitely propose similar sulfur management solutions for other large refinery operations in China."

Poulsen expects the technology to expand into new markets as well. "Because of its versatility, we are still able to introduce WSA into new applications and industries." Poulsen has the paper & pulp industry on his radar screen.

For all its versatility and effectiveness, it's the system's economic sense that cinches the deal. "Before anything else," Poulsen said, "customers look at total cost of ownership, and in most situations WSA offers an unrivalled business case compared to competing technologies, first and foremost Claus technology. The simplicity, reliability, and long lifetime of WSA offer manufacturers in a multitude of industries a cost-efficient way to comply with and even turn a profit from waste."

Haldor Topsoe provides sulfuric acid producers and refineries with several technologies beyond WSA. Haldor Topsoe is a world leader in catalysis and surface science, committed to helping customers achieve optimal performance, using the least possible energy and resources, in the most responsible way. Headquartered in Denmark, the company has project development, R&D, engineering, production plants, and sales and service across the globe. For more information, visit www.topsoe.com. ❑

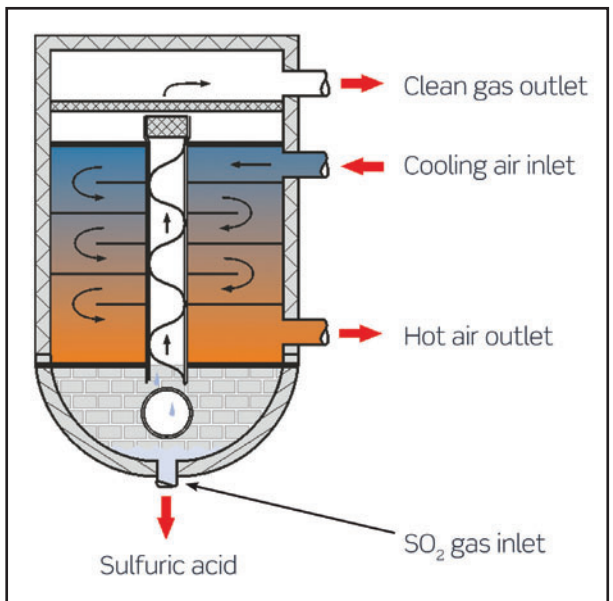

WSA condenser principles.

Stack for clean gas after the WSA condenser.

The Nanhai complex is operated by CSPC, a joint venture between China National Offshore Oil Corporation (CNOOC) and Shell Petrochemicals Co. Ltd. CNOOC is the largest offshore oil and gas producer in China.